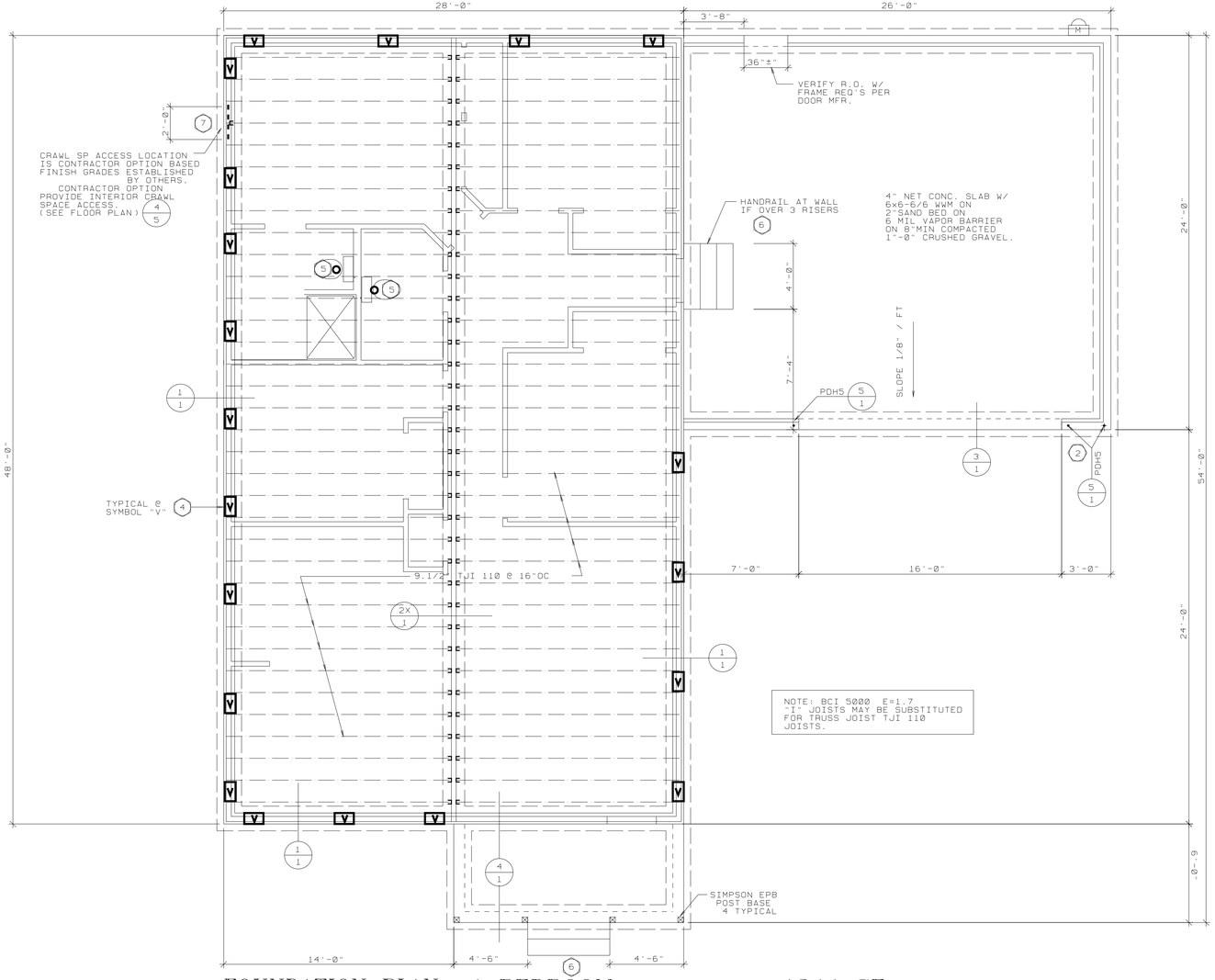

FOUNDATION PLAN 4 BEDROOM 1344 SF

DETAIL 2/1 OPTIONS

CONTRACTOR MAY SUBSTITUTE PONY WALL FOR FLUSH BEAM AS DETAILED.
TJI JOISTS SHALL BE CONTINUOUS ACROSS 2-2x4 PLATE W/ BLOCKING BETWEEN JOISTS PER MFR. DETAILS.
-OR-
TJI'S MAY ABUTT OVER 2-2x6 PLATE W/ CENTERED 1.1/4" RIM JOIST. BEARING LENGTH, AND ATTACHMENT TO PLATE AND RIM JOIST SHALL BE PER APPROVED MFR/S DETAILS.

FOR EITHER OPTION JOIST SHALL OCCUR OVER OR WITHIN 3" OF SUPPORTING STUDS.

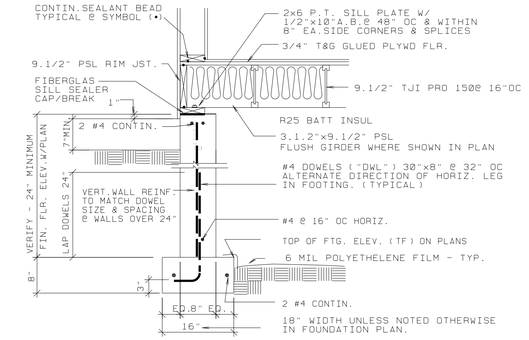

1/1 TYPICAL FOUNDATION DETAIL

3/4"=1'-0"

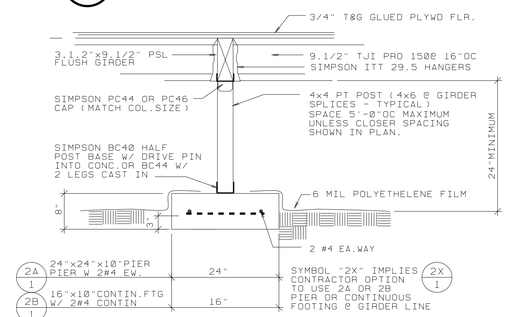

2/1 FLUSH GIRDER - POST/PIER FNDN.

3/4"=1'-0"

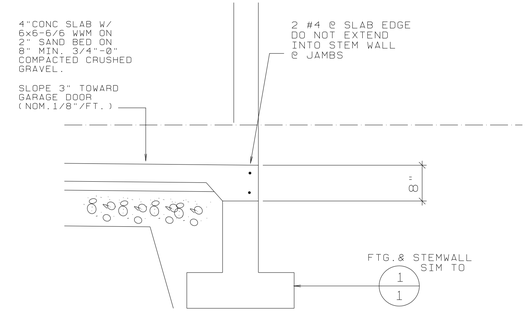

3/1 GARAGE DOOR - SILL

NO SCALE

FOUNDATION PLAN NOTES

1. LOCATION OF STANDARD BRACED PANELS.
   WALL BRACING IS BASED ON OREGON.RES.SPECIALTY CODE AS FOLLOWS:
   R602.10.3 METHOD 3: STRUCTURAL WD PANEL SHEATHING.
   R602.10.5 CONTINUOUS PANEL SHEATHING AT ALL EXTERIOR WALLS.
   R602.10.1.1 EXCEPTIONS 1 & 2 FOR BRACED WALL SPACING.
   MIN. LENGTH OF BRACED WALL PANELS @ FRAMED FLOOR (8'-0" WALL HT) = 32"
   PANELS EA SIDE OF GARAGE COOR BASED ON 602.10.6 - SEE NOTE 2 BELOW.
2. ALTERNATE BRACED PANEL PER 602.10.6.
   SIMPSON PHD5-SDS3 HOLD DOWN (4685 LB ALLOWABLE)
   5/8" SSTB ANCHOR BOLTS
   SDS 1/4"x3" SCREWS INTO (2)2x6 OR 4x6 STUDS
   NAIL WALL SHEATHING IN THESE "ALTERNATE BRACED PANELS" 8d 4"OC AT PANEL PERIMETERS.
3. P.T. RIM JST & ST.STL FLASHING @ PORCH SLAB - SEE DET 3/1
4. FOUNDATION VENTS - TYPICAL AT SYMBOL "V"
   NOMINAL 8"x16" PLASTIC DROP IN VENTS (CENTER BETWEEN FLOOR JOISTS)
   SCREENED WITH DAMPER. LAWARENCE FORMS AIR-VENT, INC. OR APPROVED.
   NOMINAL 60 SQ. IN FREE AREA.
   OR AT CONTRACTOR OPTION,
   INSTALL LOUVERED/SCREENED VENT THROUGH RIM JOIST (NOMINAL SQ. IN FREE AREA)
   COMPRESS INSULATION TO CLEAR VENT USING 2" RIGID INSULATION BOARD.
   VENT LOCATIONS ARE DIAGRAMMATIC EXCEPT LOCATE WITHIN 3'-0" OF CORNERS AND DISTRIBUTE AS UNIFORMLY AS POSSIBLE. 20 REQ'D MIN AT 60 SQ.IN EA FREE AREA.
   1245 SF NET (INSIDE FNDN WALL)/150 = 8.3 SF MIN FREE AREA = 20 VENTS @ 60 SQ.IN EA.
5. VERIFY TJI LAYOUT TO CLEAR PLUMBING ROUGH-IN.
   WHERE REQUIRED ADD TJI & OFFSET AS REQUIRED TO CLEAR WASTE.
   MAINTAIN 16" MINIMUM SPACING.
6. VERIFY CONC STAIRS W/ FINISH GRADES BY OTHERS.
   12" TREADS - MAXIMUM 7" RISERS. 3/8" RADIUS NOSINGS.
   ALL RISERS EQUAL. # 4 CONTIN @ NOSINGS.
   SEE DETAILS FOR ALTERNATE WOOD FRAME PORCH/STAIR FRAMING.
7. CRAWL SPACE ACCESS:
   24"WIDE x FULL HEIGHT OF STEM WALL.
   DOUBLE 1-3/4"x9.1/2"OR 3.1/2"x9.1/2" PSL RIM JOIST OVER OPENING.
   SIMPSON ITT 29.5 HANGERS @ TJI'S OVER OPENING TO RIM JOIST.
   PROVIDE REMOVABLE PANEL CLOSURE OVER OPENING.
   PROVIDE GALVANIZED STEEL OR CONCRETE AREA WELL AS REQUIRED BY FINISH GRADES.
8. CRAWL SPACE & FOUNDATION DRAINAGE:
   GRADE CRAWL SPACE TO LOW POINT ALONG LINE OF 3" PERFORATED PVC DRAIN LINE.
   EXCAVATE TO NOMINAL 6" BELOW BOTTOM OF FOOTINGS. LAY GEOTEC.FABRIC AND BACKFILL WITH DRAIN ROCK AS SPECIFIED.
   SEE SPECIFICATIONS REGARDING INVERT AND SLOPE OF FOUNDATION & CRAWL SPACE DRAINS.
   PROVIDE CLEANOUT TO FINISH GRADE AT NOT OVER 50' OC & AT 90 DEG BENDS.

1/4"=1'-0"

A6009-1344SF-4BR-RA

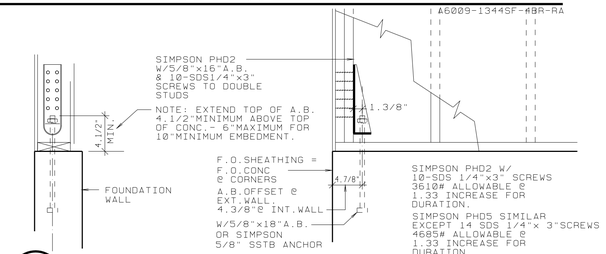

5/1 SHEAR WALL HOLD DOWN @ FOUNDATION

SHOWN FOR PHD2 SIMILAR FOR PHD5 NO SCALE - DIAGRAMMATIC

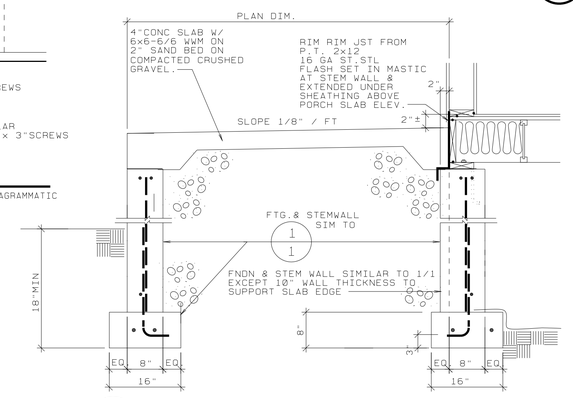

4/1 PORCH FOUNDATION DETAIL

SEE DETAIL 4/4 FOR ALTERNATE PORCH DETAIL NO SCALE

INDEX TO DRAWINGS

SHEET	TITLE
1	FOUNDATION PLAN
2	FLOOR PLAN - DOOR & WINDOW SCHEDULE
3	ROOF PLAN & DETAILS
4	EXTERIOR ELEVATIONS & DETAILS
5	MISC. DETAILS
6	HEATING-VENTILATING-AIR CONDITIONING SYSTEM (HVAC)
SP1	SPECIFICATIONS
SP2	SPECIFICATIONS

DALLAS W. HORN, ARCHITECT
MEMBER - AMERICAN INSTITUTE OF ARCHITECTS
840 SE ROSE - ROSEBURG, OR 97470
PHONE: (541) 672-5658
dwh@rio.com
REGISTERED ARCHITECT · DALLAS HORN · ROSEBURG, OREGON · STATE OF OREGON

SELF HELP HOUSING - 4 BEDROOM DWELLING RA-1
DOUGLAS COUNTY, OREGON
OWNER-DEVELOPER - UMPQUA COMMUNITY DEVELOPMENT CORP.

FOUNDATION PLAN

PROJECT NO. A9003

RA01
DATE 1/21/09
REVISIONS

DRAWING SET NO.

SHEET NO 1 OF 8